BEVERAGE-AIR

Project:	AIA#
Item:	
Location:	SIS#
Approved:	

HORIZON BOTTOM MOUNT REACH-IN

HBF72HC Half-Solid Door Reach-In Freezer

Hydrocarbon Series

MODEL:
HBF72HC-5-HS

HBF72HC BOTTOM MOUNT MODEL: HORIZON SERIES

5 Year Parts/Labor Warranty Available

7 Year Compressor Warranty

CABINET CONSTRUCTION

- Stainless steel front, side, and grille (galvanized back & bottom)
- Stainless steel interior
- LED lighting
- Full electronic control with one-touch defrost
- Expansion valve technology
- One–piece grille allow easy removal/installation for preventative maintenance
- Door locks
- Self closing doors with 120º stay open feature
- Spring-loaded style hinges
- Plug-in magnetic door gaskets
- Nine (9) heavy duty epoxy coated wire shelves
- 6” Casters with two (2) brakes

OPTIONS & ACCESSORIES

- 3 Year parts/labor standard, additional 2 year warranty available
- Stainless steel universal tray slide pair, 1 tray slide set for (1) 18” x 26” or (2) 14” x 18” pans (AC)
- 3” Casters or 6” legs
- Epoxy shelves
- Shelf clips
- Remote option* (see note on back page)

REFRIGERATION SYSTEM

- Uses environmentally friendly, energy efficient R290 refrigerant, and meets all regulatory requirements for CARB, SNAP, DOE & more
- Hot gas condensate evaporator
- Adaptive defrost
- Epoxy coated evaporator coil
- Freezer capable of maintaining product temperature down to -10ºF

Please verify qualifying units by visiting:
www.energystar.gov/cfs

3779 Champion Blvd., Winston-Salem, NC 27105
1-888-845-9800 Fax: 1-336-245-6453
Beverage-Air.com Sales@bevair.com

BEVERAGE-AIR

Horizon Bottom Mount Reach-In Freezer
Model: HBF72HC-5-HS

MODEL	HBF72HC-5-HS
EXTERNAL DIMENSIONAL DATA	
Width Overall	75”
Depth Overall (with handle)	33 ¾”
Height Overall (with casters)	84 ⅛”
Number of Doors	6
Depth with Door Open 90º	55 ¼”
Door Openings (in)	21 ⅞” x 24 ¾”
INTERNAL DIMENSIONAL DATA	
NET Capacity (cubic ft.)	68.43
Internal Width Overall (in)	72”
Internal Depth Overall (in)	28 ½”
Internal Height Overall (in)	61 ¾”
Internal Height Usable (in)	55”
Number of Shelves	9
ELECTRICAL DATA	
Full Load Amperes 125/250/60/1	13.9
REFRIGERATION DATA	
Horsepower	(2) 3/4
Capacity (BTU/Hr)	4194
Heat Rejection (BTU/Hr)	6291
Charge (lbs/grams)	0.4188 / 190 / 6.7
SHIPPING DATA	
Gross Weight - Crated	858 lbs
Height - Crated	88”
Width - Crated	77”
Depth - Crated	36”

*NOTE: Remote units are field wired and come with 6” legs.
Refrigerant must be specified at time of order.

Model Views

Required Clearance: Bottom & Rear 3”

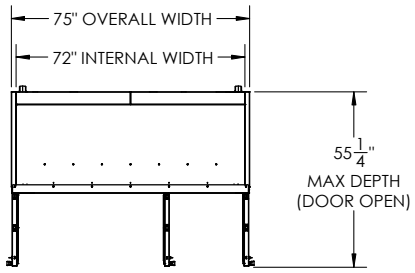

PLAN VIEW

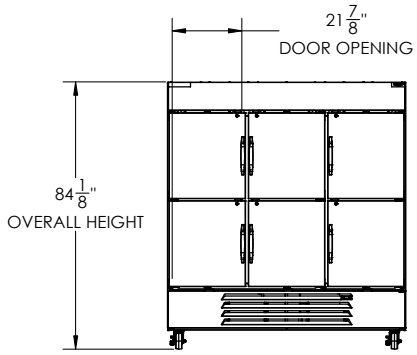

ELEVATION VIEW

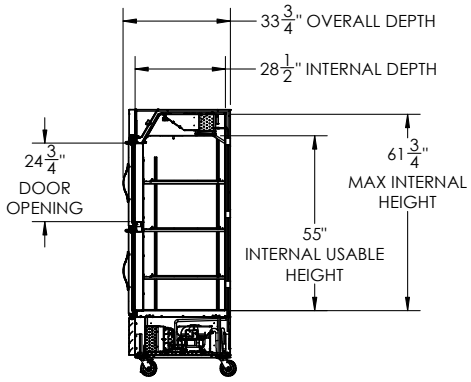

SIDE VIEW

ELECTRICAL CONNECTION

115/60/1
(2) NEMA 5-20P

Unit pre-wired at factory and include 8’ long cord and plug set.

3779 Champion Blvd., Winston-Salem, NC 27105 1-888-845-9800 Fax: 1-336-245-6453 Beverage-Air.com Sales@bevair.com

an Ali Group Company
The Spirit of Excellence