Project _____

Item # _____

Quantity _____

Intelligent Heated Display Cabinet with Humidity

Models: IHDCH-28, -45

Hatco's Intelligent Heated Display Cabinet with Humidity is the perfect way to showcase your pizzas and more. Regulating air temperature while at the same time balancing the humidity level provides the best environment for food products. With 360º viewing, and LED lighting, your food is guaranteed to get all the attention.

IHDCH-28 with accessory arms and shelf

IHDCH-45 with accessory shelves and optional front French doors

Standard features

- The IHDCH-28, our NEW half-size cabinet, has an option for a full door in the front, allowing self-service for customers
- Air flow pattern is designed to maintain consistent cabinet temperature without drying out food
- Air flow system enables the cabinet to recover temperature rapidly after opening and closing a door
- LCD touchscreen display on back of unit controls temperature, humidity and up to eight timers for each food location
- USB port in back of unit makes it easy to establish standard, pre-programmed settings for consistency and reliability
- Adjustable arms or shelves (IHDCH-28 only) can move up and down the back supports
  - IHDCH-28 unit can hold up to two shelves, four pizza arms, or a combination (see chart below)
  - IHDCH-45 unit can hold up to six pizza arms, up to three shelves, or a combination of both (see chart below)
- Arms
  - IHDCH-28 will hold a maximum 22" (558 mm) pizza pan
  - IHDCH-45 diameter can open up to 19.5" (495 mm) and can hold up to 8.5 lbs. (365 kg)
- Energy efficient LED lighting illuminates food display
- Lighted Power On/Off (I/O) switch
- Stainless steel construction and stainless steel finish

On all Intelligent Heated Display Cabinet Models customers must purchase arms and shelves separately to their own specifications.

Below are the options available to combine the shelves and arms

IHDCH-28	***IHDCH-45***
4 Arms	***6 Arms***
2 Shelves	***3 Slanted Shelves***
1 Shelf with 1 Pizza Arm	***1 Shelf with 2 Pizza Arms***
1 Shelf with 2 Pizza Arms	***1 Shelf with 4 Pizza Arms***
2 Shelves with 1 Pizza Arm	***2 Shelves with 2 Pizza Arms***

IFS anti-microbial coatings use naturally-occurring, environmentally sustainable, silver ions to help inhibit the growth of microbes on the powder coated surface. See www.hatcocorp.com/antimicrobial-paint for more information.

For operation, location and safety information, please refer to the Installation and Operating Manual.

Options (available at time of purchase only)

Designer Colors – Non-standard colors are non-returnable
- Stainless Steel standard
- ☐ Unit in *Designer* Black

☐ Four Adjustable Arms in *Designer* Black in lieu of Stainless Steel arms (IHDCH-45 only)

Inside base in *Designer* Black in lieu of Stainless Steel base
☐ IHDCH-28 ☐ IHDCH-45

☐ Front, swing out, self closing door (IHDCH-28 only)
– Non-standard colors are non-returnable – Stainless Steel standard – left-hand hinge standard –
☐ *Designer* Black

☐ Front, self closing French Doors (IHDCH-45 only)
– Non-standard colors are non-returnable – Stainless Steel standard –
☐ *Designer* Black

Accessories

Adjustable Arm for IHDCH-28
☐ in Stainless Steel ☐ in *Designer* Black

Shelf for IHDCH-28
☐ in Stainless Steel ☐ in *Designer* Black

Adjustable Arm for IHDCH-45
☐ in Stainless Steel ☐ in *Designer* Black

Shelf for IHDCH-45
☐ in Stainless Steel ☐ in *Designer* Black

Riser (12" diameter x 1.25" H [32 mm])
☐ in Stainless Steel ☐ in *Designer* Black

☐ Front Door Lock (IHDCH-28 only)

☐ Reverse Osmosis System with storage tank (EVERPURE model LVRO-75HE)

☐ Water Pressure Regulator Kit (regulator, gauge and shut-off valve)

Sign Holders (signs not included) – recommended sign size: 2" x 3.5"
- ☐ Sits on base of unit in Stainless Steel
- ☐ Sits on base of unit in *Designer* Black
- ☐ Customer left-hand side in Stainless Steel (clips onto Arm)
- ☐ Customer left-hand side in *Designer* Black (clips onto Arm)
- ☐ Customer right-hand side in Stainless Steel (clips onto Arm)
- ☐ Customer right-hand side in *Designer* Black (clips onto Arm)

ANSI/NSF 4

MADE IN THE USA

HATCO CORPORATION | P.O. Box 340500 Milwaukee, WI 53234-0500 U.S.A. | (800) 558-0607 | (414) 671-6350

www.hatcocorp.com | support@hatcocorp.com | Find a Hatco Rep | Image Library | Document Library | Chat

Intelligent Heated Display Cabinet with Humidity

Models: IHDCH-28, -45

IHDCH-28

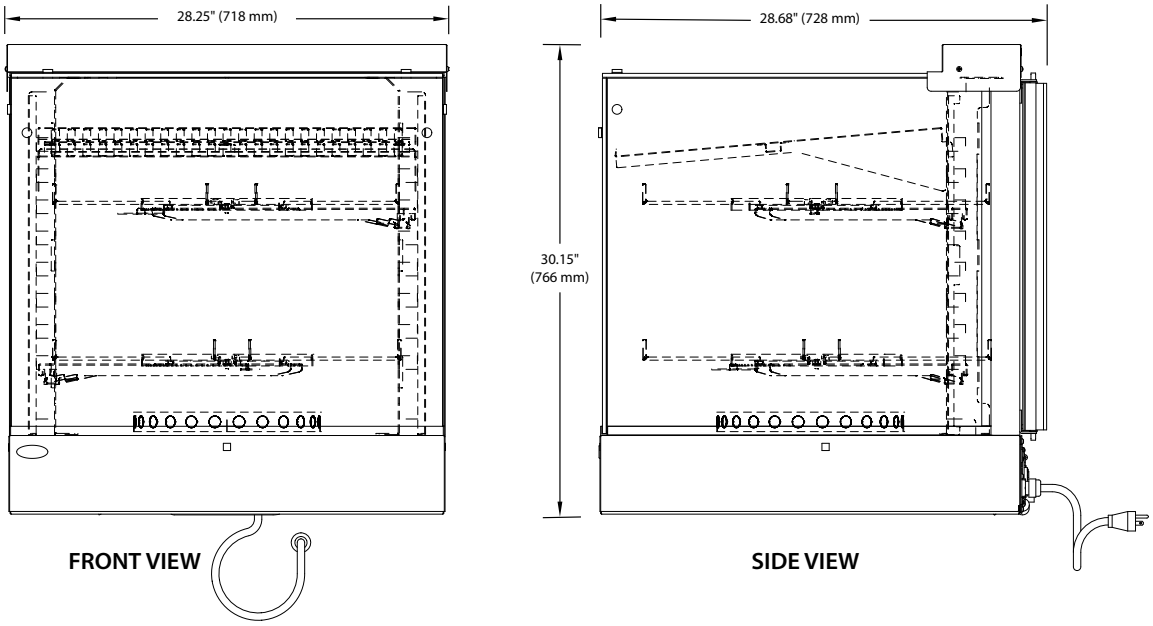

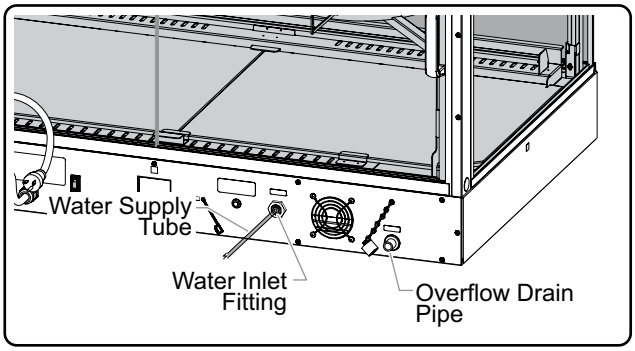

A water strainer, water filter and 15 feet of plastic tubing is included with the unit to install on the water supply line before it enters the unit.

WATER QUALITY REQUIREMENTS

Water supply in excess of 3.0 grains of hardness per gallon (GPG) (.75 grains of hardness per liter) must be treated and softened before being used. Water containing over 3.0 GPG (.75 GPL) will decrease the efficiency and reduce the operating life of the unit.

Note: Product failure caused by liming or sediment buildup is not covered under warranty.

SPECIFICATIONS
Intelligent Heated Display Cabinet with Humidity

Model	Dimensions (W x D x H)	Cabinet Opening (W x H)	Volts	Hz	Watts	Amps	Plug	Ship Weight*
IHDCH-28	28.25" x 28.68" x 30.15 (718 x 728 x 766 mm)	22" x 20.7" (558 x 525 mm)	208	50/60	3090	14.9	NEMA 6-20P	207 lbs. (94 kg)
			240			12.9		

* Shipping weight includes packaging.

CORD LOCATION

Servers side, lower left corner.

PLUG CONFIGURATIONS

NEMA 6-20P

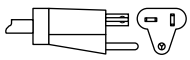

HATCO CORPORATION | P.O. Box 340500 Milwaukee, WI 53234-0500 U.S.A. | (800) 558-0607 | (414) 671-6350

www.hatcocorp.com | support@hatcocorp.com | Find a Hatco Rep | Image Library | Document Library | Chat

Intelligent Heated Display Cabinet with Humidity

Model: IHDCH-28, -45

IHDCH-45

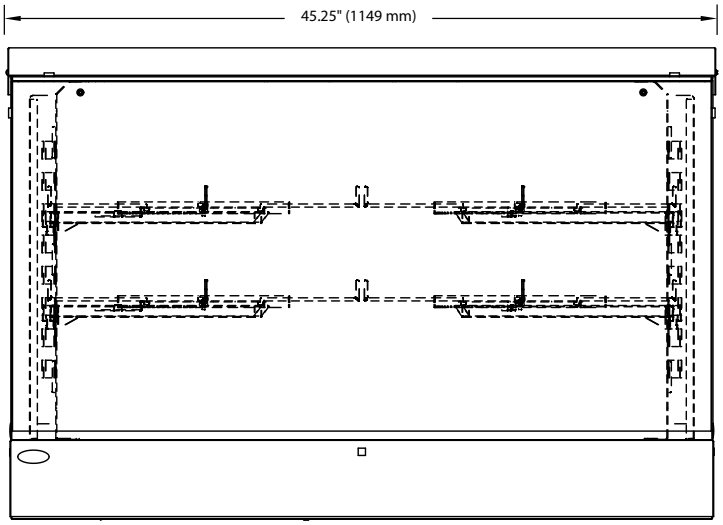

FRONT VIEW

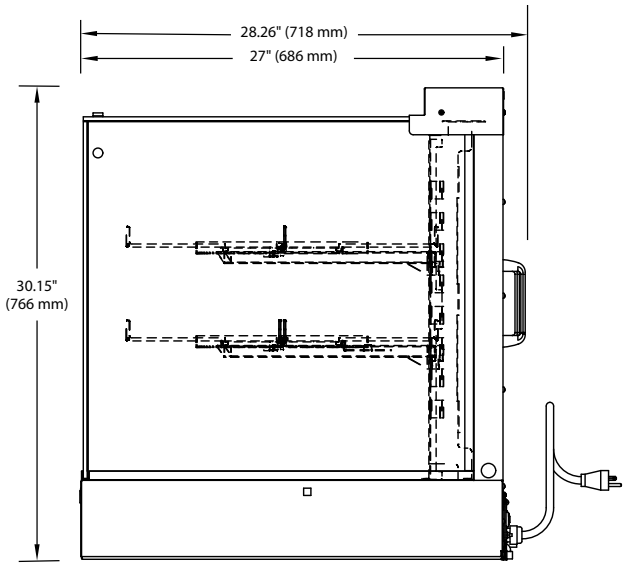

SIDE VIEW

SPECIFICATIONS
Intelligent Heated Display Cabinet with Humidity

Model	Dimensions (W x D x H)	Cabinet Opening (W x H)	Volts	Hz	Watts	Amps	Plug	Ship Weight*
IHDCH-45	45" x 28.29" x 30.15 (1143 x 718 x 766 mm)	18" x 20.87" (457 x 530 mm)	208	50/60	3090	14.9	NEMA 6-20P	270 lbs. (123 kg)
			240			12.9		

* Shipping weight includes packaging.

CORD LOCATION

Servers side, lower left corner.

PLUG CONFIGURATIONS

NEMA 6-20P

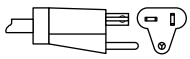

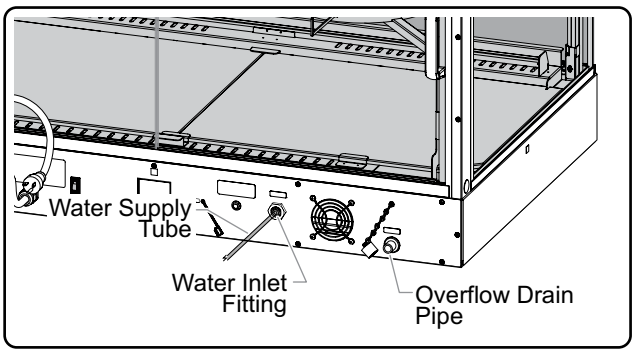

A water strainer, water filter and 15 feet of plastic tubing is included with the unit to install on the water supply line before it enters the unit.

WATER QUALITY REQUIREMENTS

Incoming water in excess of 3.0 grains of hardness per gallon (GPG) (.75 grains of hardness per liter) must be treated and softened before being supplied to unit(s).Water containing over 3.0 GPG (.75 GPL) will decrease the efficiency and reduce the operating life of the unit.

Note: Product failure caused by liming or sediment buildup is not covered under warranty.

PRODUCT SPECS
Intelligent Heated Display Cabinets with Humidity

The Intelligent Heated Display Cabinet with Humidity shall be a Model ..., rated at ... volts and ... watts, as manufactured by the Hatco Corporation, Milwaukee, WI 53234 U.S.A.

The Display Cabinet shall have ... tempered glass top, front and end panels, removeable and adjustable support arms, LCD touch screen controls, timers for 6 to 8 pan locations, USB connection, removable floor sheets, crumb trays under air vents, LED lighting and a 6' (1829 mm) cord with plug attached.

Accessories shall include adjustable arms, shelves, risers, reverse osmosis system with water filter and strainer, water pressure regualtor kit and sign holders.

Warranty consists of 24/7 parts and service assistance (US and Canada only).

HATCO CORPORATION | P.O. Box 340500 Milwaukee, WI 53234-0500 U.S.A. | (800) 558-0607 | (414) 671-6350

www.hatcocorp.com | support@hatcocorp.com | Find a Hatco Rep | Image Library | Document Library | Chat