HalifaxHoods

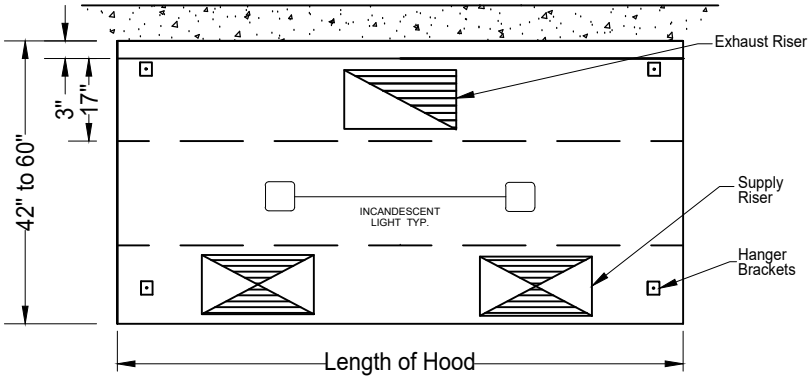

It is the responsibility of the architect/owner to ensure that the hood clearance from limited-combustible and combustible materials is in compliance with local code requirements

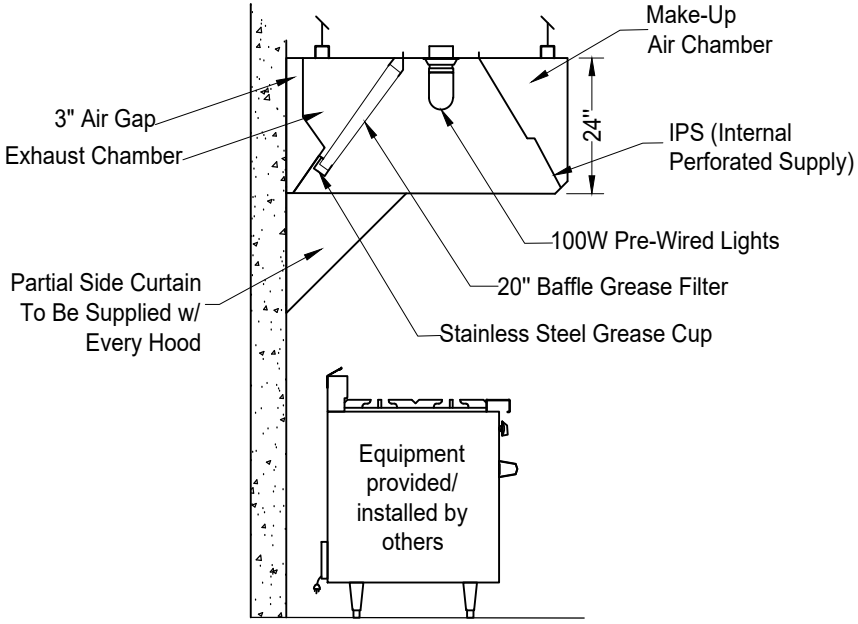

Type 1 Commercial Kitchen Hoods - Short Cycle Makeup Air

Hood General Specifications

- Hoods are built in accordance with NFPA 96, NSF Specifications and Conforms to UL listed to ANSI / UL and CAN / ULC
- Hoods are constructed of 18 gauge steel
- All joints are welded liquid tight, without seams
- Grease Filters are 20" stainless steel baffle type which carry a UL listing
- Grease trough is made to receive grease extracted by the filter
- Each Grease trough is equipped with a stainless steel cup
- Factory does not cut holes in hood
  Hoods 10' and larger receive 6 hanger brackets total
- IPS (Internal Perforated Supply, allows flexibility during installation and evenly distributes the make-up air, it is also easily removable for cleaning)
- Standard 430 all stainless steel where exposed (front and ends)

NFPA® NSF® CLASSIFIED UL EPH ANSI/NSF2 c UL us LISTED Safety Certified MH29547

revised 12/20