WATERLOO

High Quality, Durable, and Innovative Water Solutions

Item# : _____ Qty : _____

Project : _____

Approval : _____

Date : _____

750FSS8

8" Center Wall Mount Service Sink Faucet

Features:

- Heavy-duty chrome-plated brass construction
- Wall-mounted design with 8" centers
- Built-in service stops
- Vacuum breaker to prevent water backflow
- Sturdy pail hook on the nozzle for hanging items
- Leak-resistant 1/4 turn ceramic cartridges with check valves
- Industry-leading 3 year warranty

Specifications:

C US

NSF Certified to NSF/ANSI 61 & 372

Item	Faucet Type	Faucet Centers	Spread	Clearance	Height	Max Water Temp	Flow Rate	Inlet	Mounting Style
750FSS8	Service Sink	8"	2.5"	1.75"	3.88"	180°F	2.0 GPM	1/2" NPT	Wall Mount

750FSS8

8" Center Wall Mount Service Sink Faucet

Technical Details:

Side View

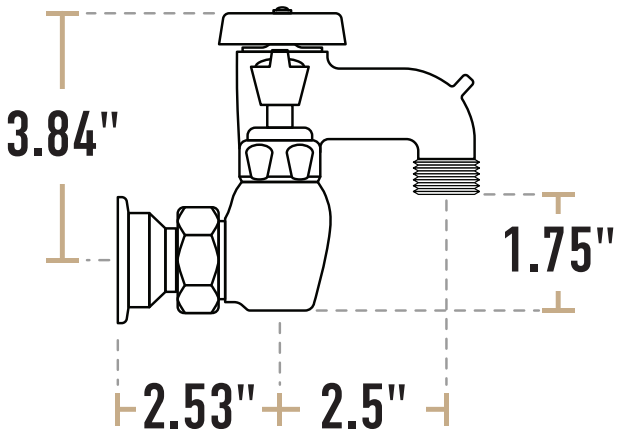

Front View

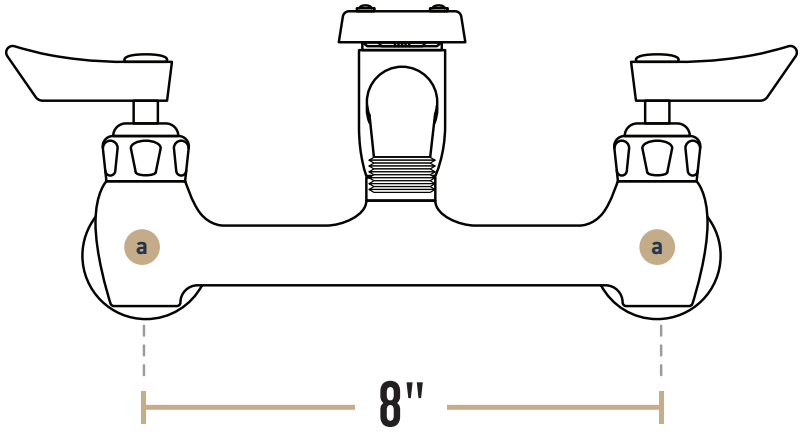

Connections

a	(2) 1/2" NPT Inlets