STAINLESS STEEL WALL MOUNTED HAND SINK WITH GOOSENECK FAUCET & P-TRAP

ITEM #: _____ QUANTITY: ____

PROJECT: _____

APPROVAL: _____

DATE: _____

REGENCY Tables and Sinks

FEATURES

- 20-gauge type 304 stainless steel
- Single bowl with 1½" IPS drain basket
- Easy-to-install 8" gooseneck faucet included
- Holes punched on 4" centers
- 9½" backsplash
- 13" chrome p-trap prevents unpleasant sewage odors and gases from escaping your drain pipe

NSF

SPECIFICATIONS

ITEM	OVERALL (LEFT TO RIGHT)	OVERALL (FRONT TO BACK)	OVERALL (HEIGHT)	BOWL (LEFT TO RIGHT)	BOWL (FRONT TO BACK)	BOWL DEPTH
600HS17PT	17"	15"	15"	14"	10"	5½"

01/2019

STAINLESS STEEL WALL MOUNTED
HAND SINK
WITH GOOSENECK FAUCET & P-TRAP

REGENCY
Tables and Sinks

600HS17PT • 17″ x 15″ with P-Trap

TOP

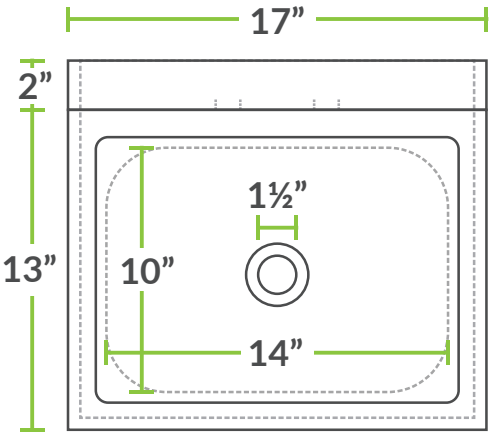

FRONT

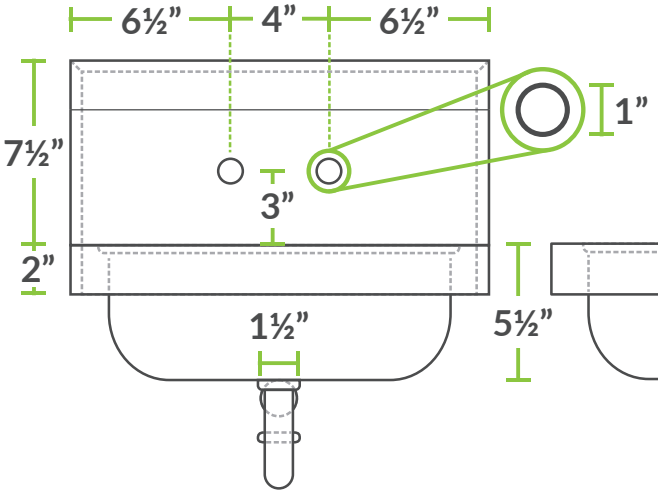

SIDE

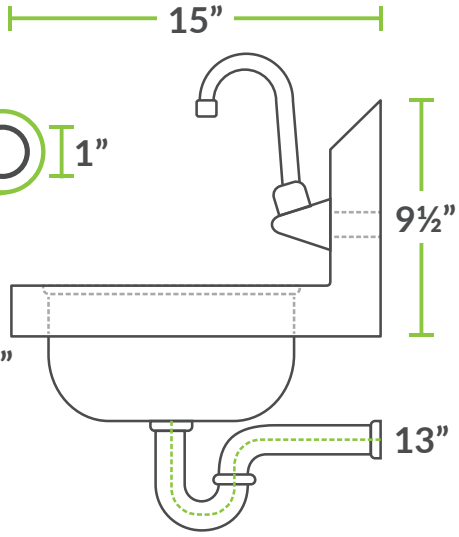
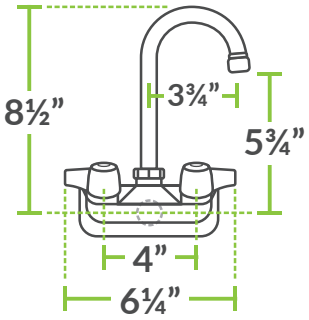
FAUCET