VACPAK-IT

#186VMC10DPU

CHAMBER VACUUM PACKAGING MACHINE

WITH DRY PUMP & 10¼" SEAL BAR

- Quick 25 to 60 second vacuum time and 6 second seal time; times are adjustable
- Easy-to-read digital vacuum pressure digital includes simple, intuitive controls
- 304 series stainless steel body for strength; transparent lid for product visibility
- Pressure gauge included
- Dry pump eliminates need for oil to save time and money
- Seal bar easily removable for cleaning and maintenance

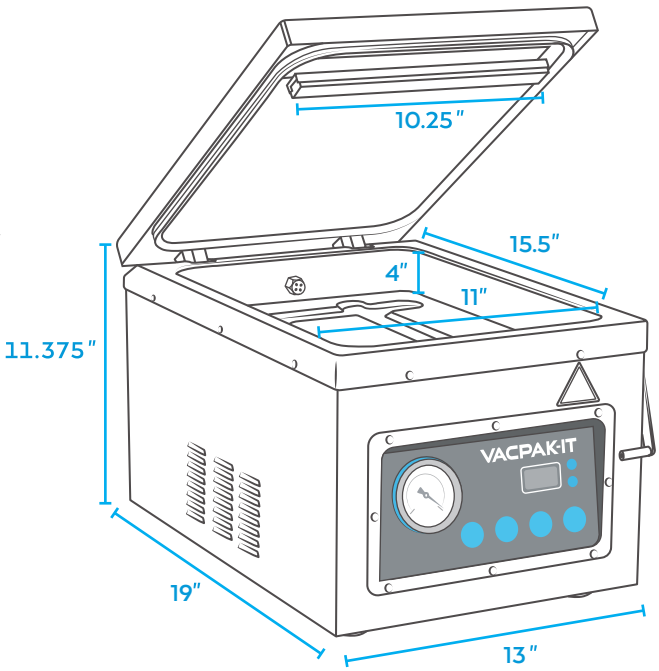

WIDTH	13"
DEPTH	19"
HEIGHT	11.375"
SEAL BAR LENGTH	10.25"
CHAMBER WIDTH	11"
CHAMBER DEPTH	15.5"
CHAMBER HEIGHT	4"
SEAL BAR(S)	Single

STYLE	Chamber
PUMP TYPE	Dry
AMPS	9.17 Amps
HERTZ	60 Hz
PHASE	1
VOLTAGE	120V
WATTAGE	1100W
HORSEPOWER	1/4HP

3/2019