BEVERAGE-AIR

Project: _____	AIA#
Item: _____	
Location: _____	SIS#
Approved: _____	

WTRD REFRIGERATORS WITH DRAWERS

WTRD60AHC Two Drawer Worktop Refrigerators
Hydrocarbon Series

MODELS:
WTRD60AHC-2

WTRD60AHC-2

3 Year Parts/Labor Warranty
Additional 2 Year Compressor Warranty

CABINET CONSTRUCTION

- Stainless steel front, sides door and drawers *(galvanized back & bottom)*
- Interior liner is made of corrosion resistant aluminum
- Stainless steel worktop for added durability
- Full electronic control
- Interior thermometer is standard
- 4” Removable backsplash for flexibility and ease of cleaning
- Painted aluminum door and drawer handles
- Snap-in door and drawer gaskets
- Two (2) epoxy coated shelves
- Upper and lower pull-out drawers accommodate 6” deep pans
- Stainless steel drawer frames supported on telescoping drawer slides
- Drawer slides include locking mechanism that prevents drawer from being inadvertently pulled off cabinet
- 6” Casters, (2) with brakes standard
- Operates at 36º-38ºF for optimum food preservation

OPTIONS & ACCESSORIES

- ☐ Stainless steel back and grille
- ☐ Stainless steel interior
- ☐ Combination models available
- ☐ 6” Legs
- ☐ 3” Casters
- ☐ Low profile casters
- ☐ Food service pans
- ☐ Cutting board
- ☐ Remote option

REFRIGERAT ION SYSTEM

- Refrigeration system uses R290 refrigerant to comply with all environmental concerns
- Automatic, non-electric evaporator
- System is serviceable from rear
- Epoxy coated evaporator coil

3779 Champion Blvd., Winston-Salem, NC 27105
1-888-845-9800 Fax: 1-336-245-6453
Beverage-Air.com sales@bevair.com

WTRD60AHC-2 Refrigerators With Drawers: Worktop Series

BEVERAGE-AIR

Worktop Refrigerators – With Drawers
Models: WTRD60AHC-2

MODEL	WTRD60AHC-2
EXTERNAL DIMENSIONAL DATA	
Width Overall	60”
Depth Overall with Handle & Bumper	32”
Height Overall with 6” Casters	39 5/8”
Number of Doors	1
Depth with Door Open 90 °	55 1/4”
Depth of Drawer Open (in)	Upper 22 5/8” x 11 1/8” Lower 22 5/8” x 7 1/2”
Shelf Area	Upper 439 11/32 Lower 386 1/8
Number of Drawers	2
INTERNAL DIMENSIONAL DATA	
NET Capacity (cubic ft.)	14.75
Internal Width Overall (in)	56”
Internal Depth Overall (in)	23 1/2”
Internal Depth Useable (in)	Upper 18 1/2” Lower 15 3/8”
Internal Height Overall (in)	23”
Number of Shelves	2
ELECTRICAL DATA	
Full Load Amperes 115/60/1	3
REFRIGERATION DATA	
Horsepower	1/5
Capacity (BTU/Hr)*	1350
WEIGHT DATA	
Gross Weight (Crated lbs)	342 lbs
Height - Crated	35”
Width - Crated	62”
Depth - Crated	33”

Model Views

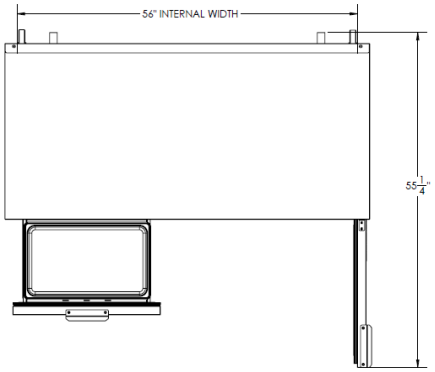

Plan View

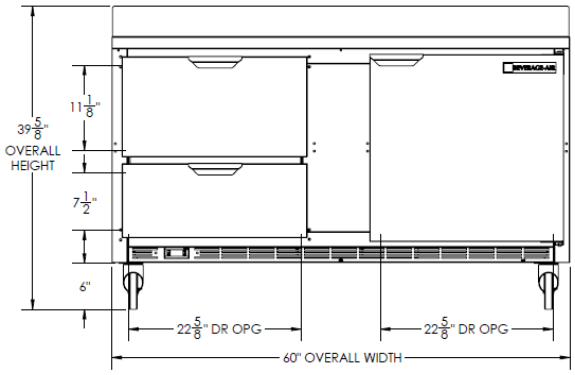

Elevation View

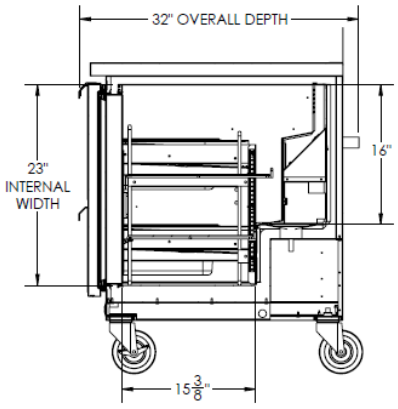

Side View

ELECTRICAL CONNECTION

Units pre-wired at factory and include 8’ long cord and plug set.