10/2019

CP Series
Deluxe Ice Cream Dipping Cabinet

MODEL #178CPW68HC

REFRIGERATION AVANTCO

www.AvantcoRefrigeration.com

CP SERIES - ICE CREAM DIPPING CABINET

Display and serve your customers' favorite ice cream flavors.

CABINET CONSTRUCTION

Heavy duty construction includes a white steel interior and a durable white steel exterior, resulting in strength, durability, and an attractive appearance. Stainless steel top adds counter space to merchandise cones and toppings.

Foamed-in-place CFC- and HCFC-free polyurethane insulation enhances the structural strength of the cabinet and helps increase energy efficiency.

Front and rear grills are easily removed for cleaning and servicing. Single lid design allows for easy access.

REFRIGERATION SYSTEM

Environmentally-friendly R290 refrigerant. Front- and rear-breathing design allows for installation adjacent to other equipment or cabinetry. Cold wall design prevents cold air from escaping.

SHELVING

(6) Epoxy-coated shelves included. Each holds (2) 3-gallon ice cream tubs at the perfect height for service. Additional storage for (8) 3-gallon tubs underneath.

MODEL FEATURES

Bright LED lighting enhances product visibility. Included tub covers create a clean appearance.

Pre-drilled holes for dipper well installation on either the left or right side of the cabinet.

Included night covers protect product during off hours.

Preprogrammed digital controls.

SPECIAL FEATURES

- Eco-Friendly R290 hydrocarbon refrigerant
- Durable and attractive white exterior
- Maintains temperature from (-15) to (-8)˚F for ice cream storage and service
- Six epoxy-coated steel shelves hold (2) 3-gallon tubs each for a total of 12 tubs, with storage for (8) 3-gallon tubs underneath
- Foamed-in-place polyurethane insulation
- Easy-to-read preprogrammed digital temperature controller
- 115V; 1/2hp

WARRANTY

RESIDENTIAL: Avantco assumes no liability for parts or labor coverage for component failure, factory defect or any other damages for units installed in non-commercial foodservice or residential applications.

1 year WARRANTY — Parts & Labor

5 year WARRANTY — Compressor

Intertek Intertek

CP Series
Ice Cream Dipping Cabinets

MODEL # 178CPW68HC

www.AvantcoRefrigeration.com

TECHNICAL DATA

Dimensions

Exterior Dimensions	67¾"W x 28"D x 51¼"H
Interior Dimensions	61⅞"W x 22"D x 28¼"H
Net Volume	19.9 cu. ft.
Net Weight	310 lb.
Gross Weight	432 lb.
Packing Dimensions	72"W x 32¼"D x 58"H
Tub Holder Capacity (3 Gallon Tubs)	12
Storage Capacity (3 Gallon Tubs)	8

Cooling

Temperature Range	(-15) to (-8)°F
Refrigerant	R290
Max. Ambient Temperature	90°F
Defrosting	Auto
Temperature Controller	Digital
Horsepower	1/2
BTU (btu/hr)	1794

Construction

Exterior Material	White-Coated Steel
Interior Material	White-Coated Steel
Insulation Material	Foamed-In-Place Polyurethane

Electrical

Voltage	115
Amps	5.64
Hz	60
Phase	1
Plug Type	NEMA 5-15P
Electrical Cord Length	84"

PLAN VIEW

FRONT VIEW

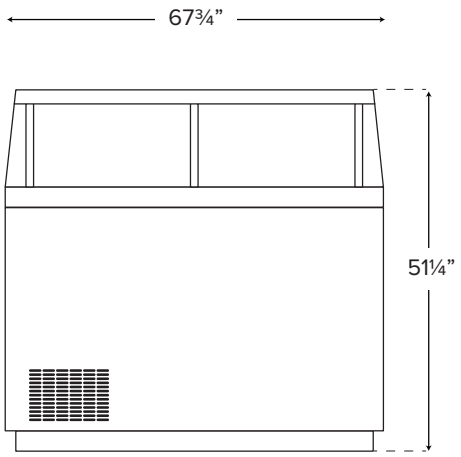

SIDE VIEW

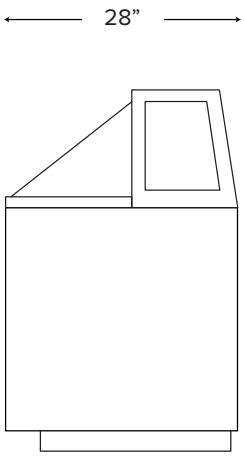

TOP VIEW

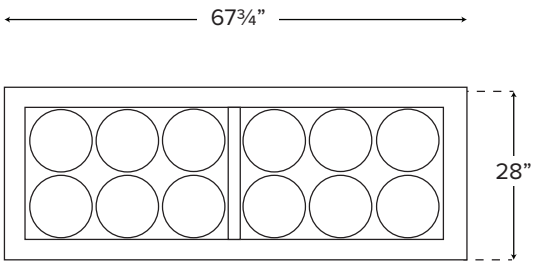

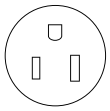

NEMA 5-15P