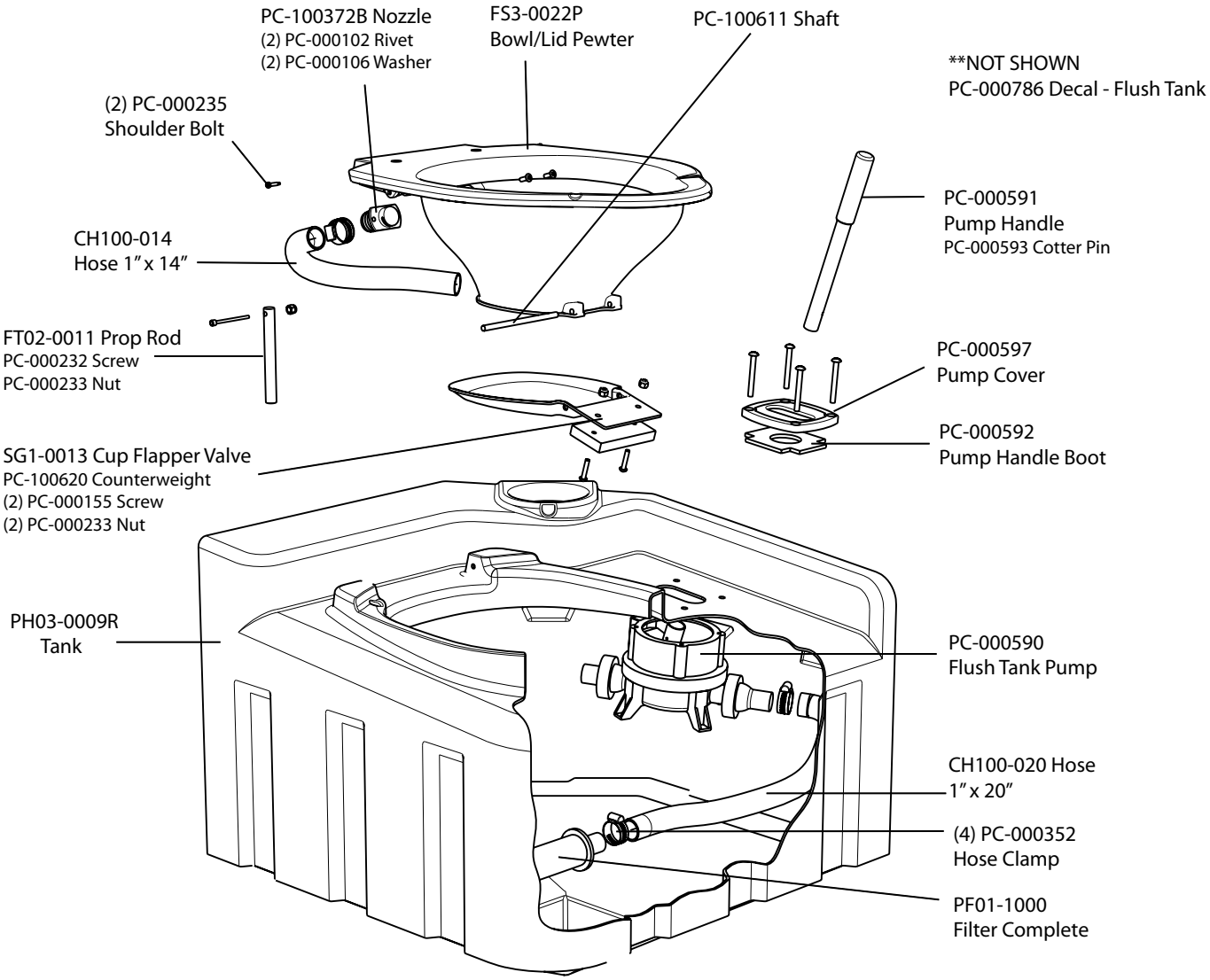Optional Recirculating Flush System - Exploded View