FWD3-1000 - Fresh Water Delivery System
Small Parts Listing

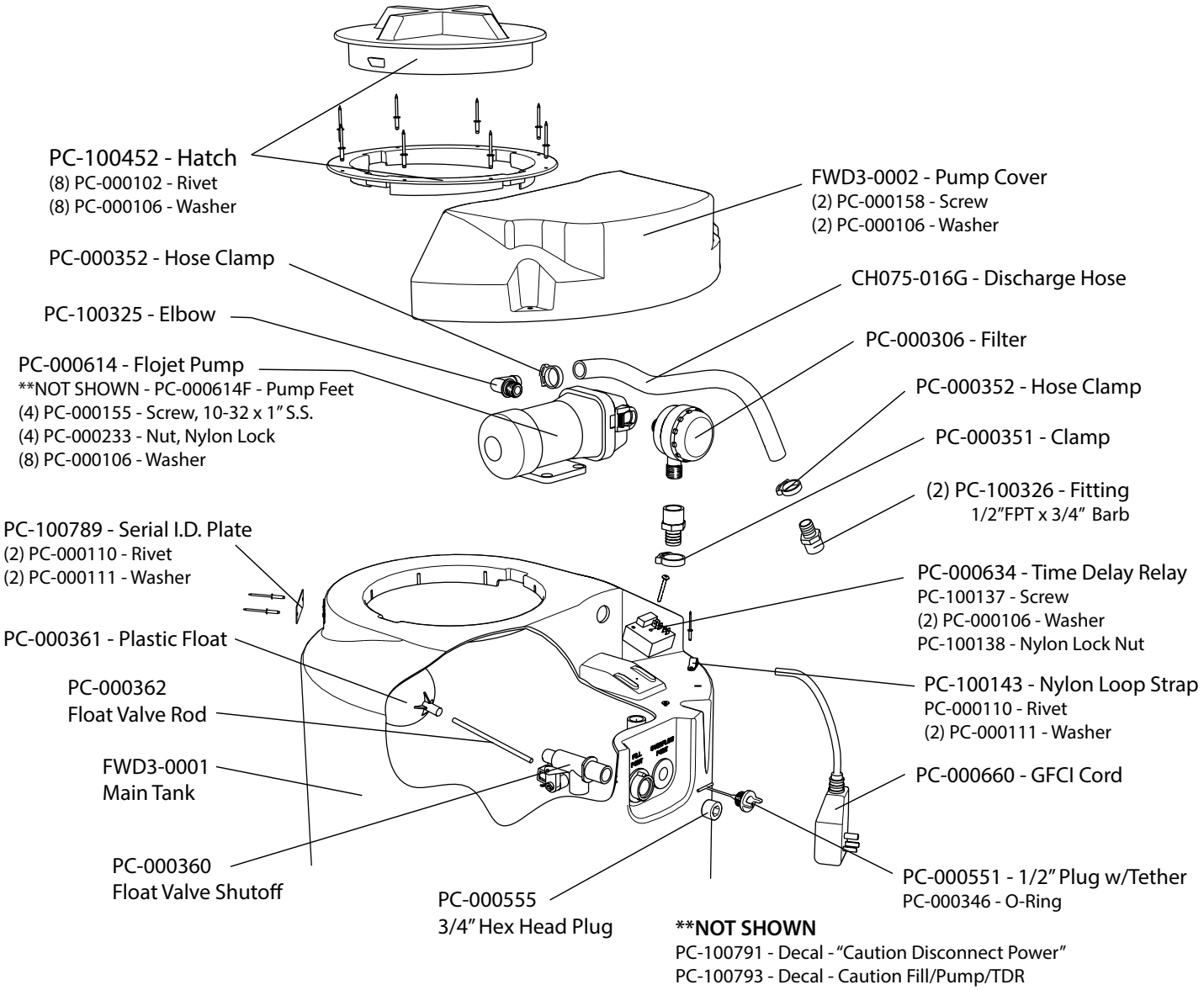

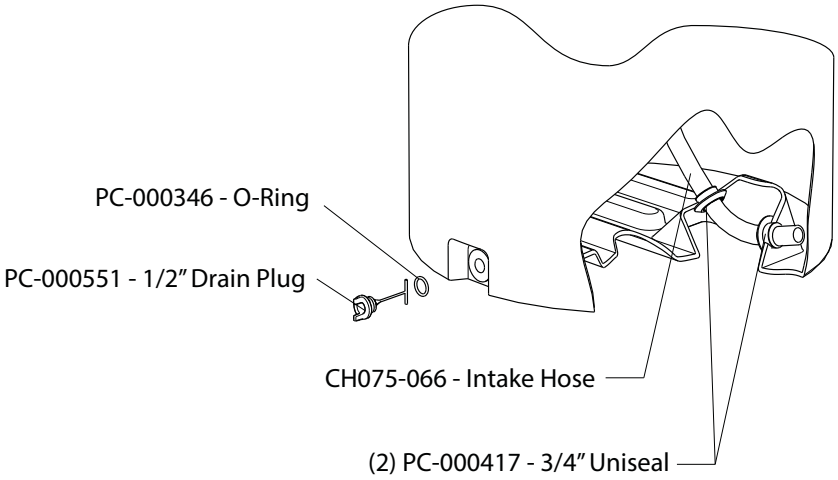

Updated December 2016