ASSEMBLY INSTRUCTIONS

STEP 1.

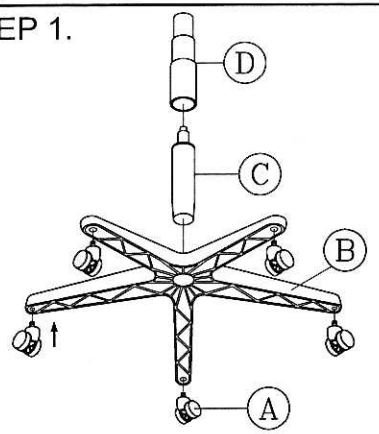

STEP 2.

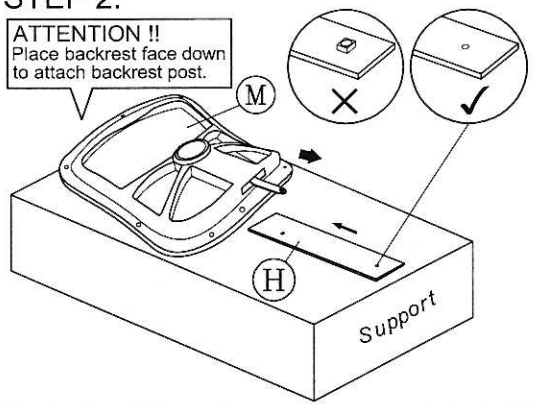

STEP 3.

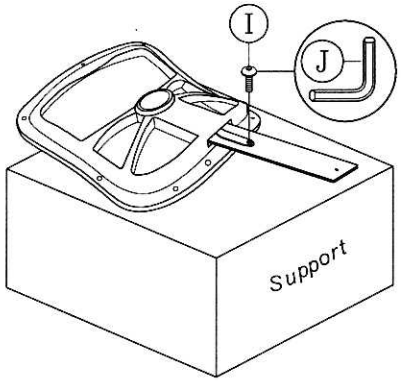

STEP 4.

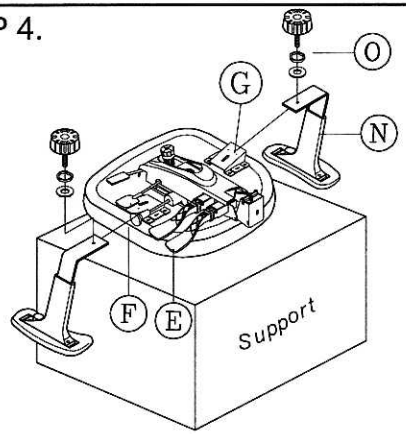

STEP 5.

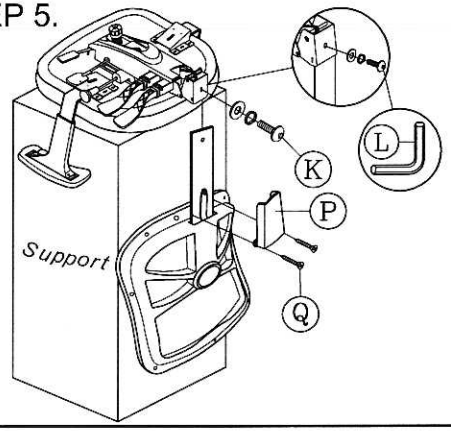

STEP 6.

A

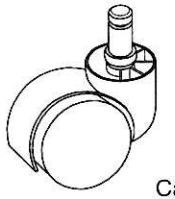

Caster (5)

B

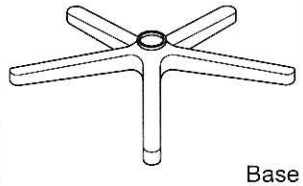

Base

C

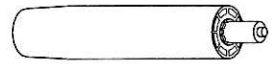

Seat Post

D

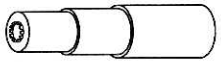

Seat Post Cover

E / F / G (pre-assembled)

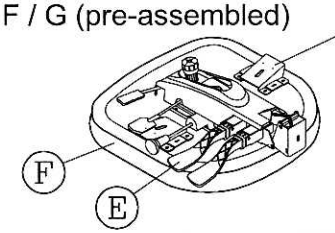

(E) Mechanism
(F) Seat
(G) Arm Bracket (2)

H

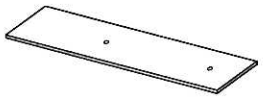

Backrest Post

I

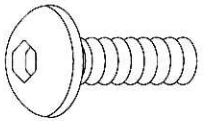

Backrest Screw

J

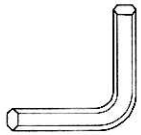

M5 Size Allen Wrench

K

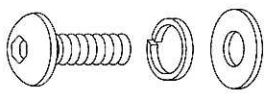

Backrest Bolt + Washers

L

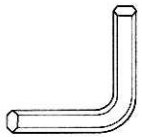

M6 Size Allen Wrench

M

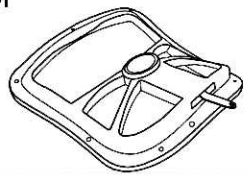

Backrest

N

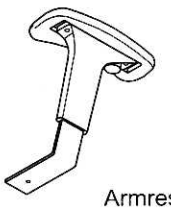

Armrest (2)

O

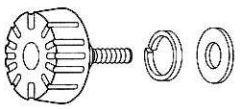

Arm Width Adjustment
Knob + Washers (2)

P

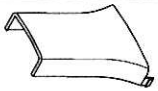

Backrest Post Bellow

Q

Backrest Post
Bellow Screw (2)

Model: ALE-EL4215
Manufactured for / Hecho para / Fabriqué pour Alera® / USSCo
1 Pkwy North, Ste 100, Deerfield, IL 60015 © 2014 USSCo
Made in / Hecho en / Fabriqué à Taiwan
Product support and parts : 1-800-733-4000
Ayuda del producto y partes / Support technique et pieces

OPERATING INSTRUCTIONS

ALE-EL4215

A. Seat height adjustment

To raise the seat height, stand up from the chair while lifting the lever (A) under the right side of the seat. To lower the seat height, lift the lever (A) while sitting in the chair.

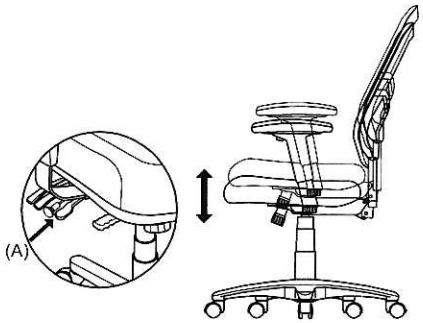

B. Seat angle adjustment

Push the lever (B) upward. Leaning back will cause the chair seat to tilt backwards. To lock the chair seat in the upright or vertical position, sit upright and push the lever (B) downward.

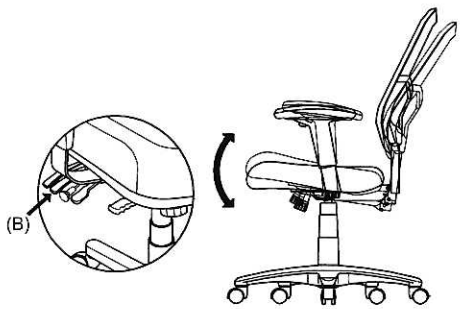

C. Back angle adjustment

Push the lever (C) upward. Leaning back will cause the chair back to tilt backwards. To lock the chair back in the upright or vertical position, sit upright and push the lever (C) downward.

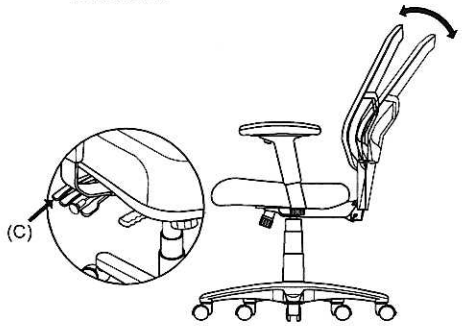

D. Forward tilt lever

To activate the forward tilt, lift the lever (B), lean back slightly and pull lever (D) backward. This will allow you to lean to a forward position. Once the desired angle is reached, push lever (B) downward to lock position.

E. Tilt tension

Knob underneath seat adjusts angle and ease with which chair reclines to the different weights and strengths of different users. To increase tension, turn knob to the right. To release tension (loosen), turn knob to the left.

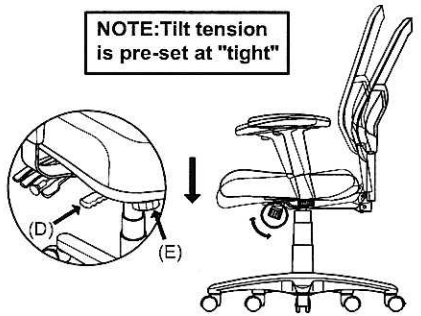

F. Arm width adjustment

To adjust the arm width, loosen the bolt under the arm support and move arm to the desired placement. After reaching desired placement, tighten bolt.

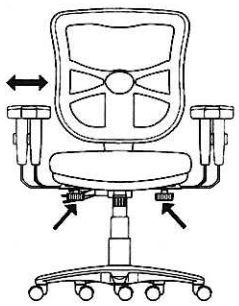

G. Arm height adjustment

To adjust arm height, push the button on the outside of each arm and move the arm up or down. Release the button to set the height.

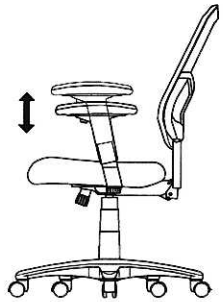

H. Sliding seat adjustment

Pull handle out to allow seat to slide forward or backward. Release handle to lock in desired seat position.

J. Backrest height adjustment

To raise the back, pull up on the seat back until it clicks into the desired height.
To lower the back, raise the seat back all the way up until tension is released and then lower all the way down. Raise back up to desired position.

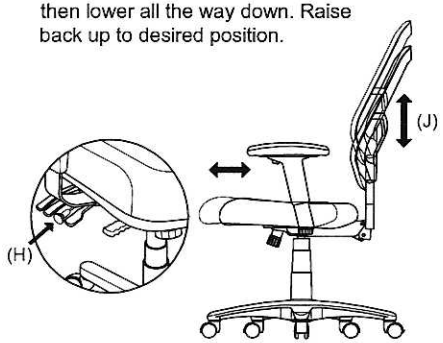

PREVENTIVE MAINTENANCE AND WARNING!

- USE THIS PRODUCT ONLY FOR SEATING ONE PERSON AT A TIME
- DO NOT USE THIS CHAIR AS A STEP STOOL / LADDER
- DO NOT SIT ON ANY PART OF THE CHAIR EXCEPT THE SEAT
- DO NOT USE CHAIR ON UNEVEN FLOOR SURFACES
- DO NOT USE CHAIR UNLESS ALL BOLTS, SCREWS AND KNOBS ARE TIGHTENED.
- **AT LEAST EVERY THREE MONTHS, CHECK ALL BOLTS, SCREWS AND KNOBS TO BE SURE THEY ARE TIGHTENED.**
- IF ANY PARTS ARE MISSING, BROKEN, DAMAGED OR WORN, STOP USE OF THE PRODUCT UNTIL REPAIRS ARE MADE USING FACTORY AUTHORIZED PARTS
- DISPOSE OF PACKAGING PROPERLY. PLASTIC BAG IS NOT A TOY. DO NOT USE PLASTIC BAG AS HEAD COVERING - IT MAY CAUSE SUFFOCATION
- FAILURE TO FOLLOW THESE WARNINGS COULD RESULT IN SERIOUS INJURY